TEAM 708 HATTERS ROBOTICS

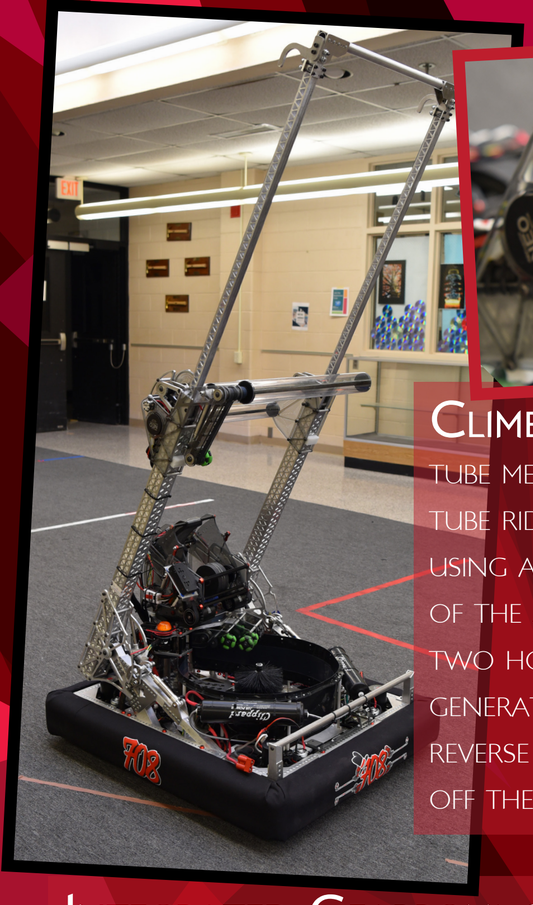

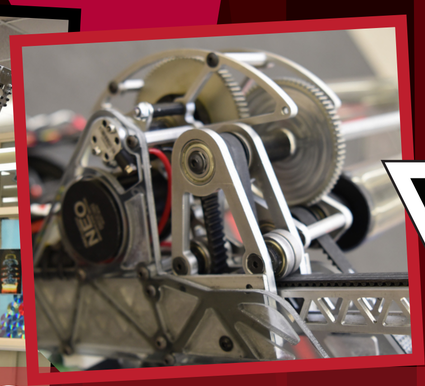

Climber: A one-stage telescoping tube mechanism in which the inner tube rides on a custom bearing block using a belt pulley system. The end of the arms are connected and have two hooks, which grab onto the generator switch. The belts then reverse direction to pull the robot off the ground.

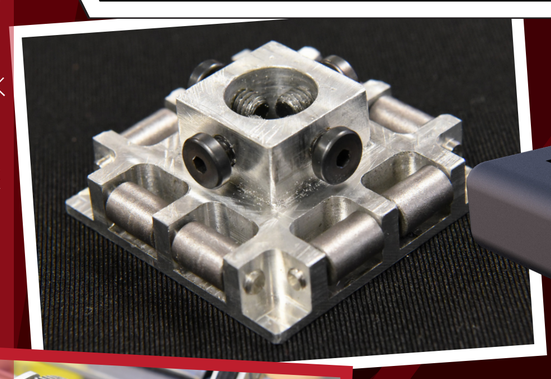

Intake: 3 rollers manipulate the power cells over the bumper and into the hopper. It is attached to the arm and used in the low arm position.

Integrated Gearbox: Controls the intake, spinner mechanism, and climber belt system using one motor. It connects the axles of the intake and spinner through belts and gears. A dog-shifter allows the motor's power to shift to a different gear which controls the belt system on both sides through an axle.

Spinner Mechanism: A module that uses the power of the intake to be driven simultaneously. It interacts with the Control Panel by dropping a 2-inch omni wheel using an air cylinder when the arm is raised to the starting configuration.

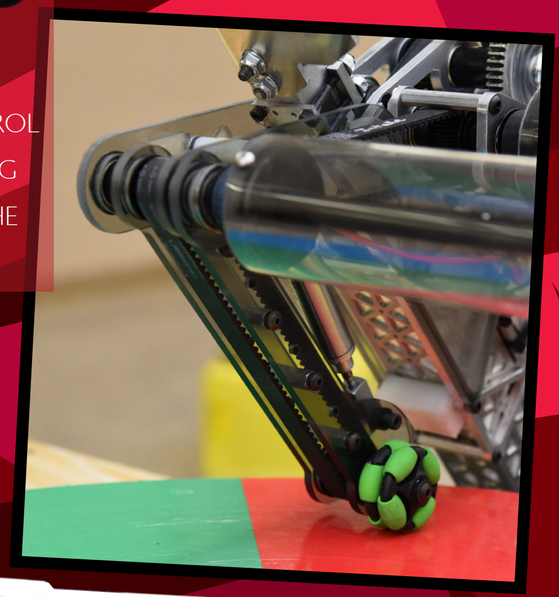

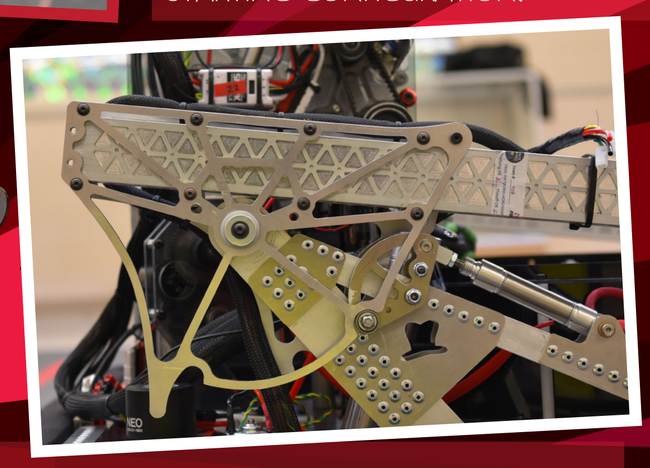

Arm Pivot: On each side of the arms, there are custom-made plates that allow the arm to lock to 3 different positions: starting configuration, low (power cell pickup and drive under trench), and high (climber position). This is done using 2 air cylinders per side, one as a locking mechanism and the other to raise the arm.

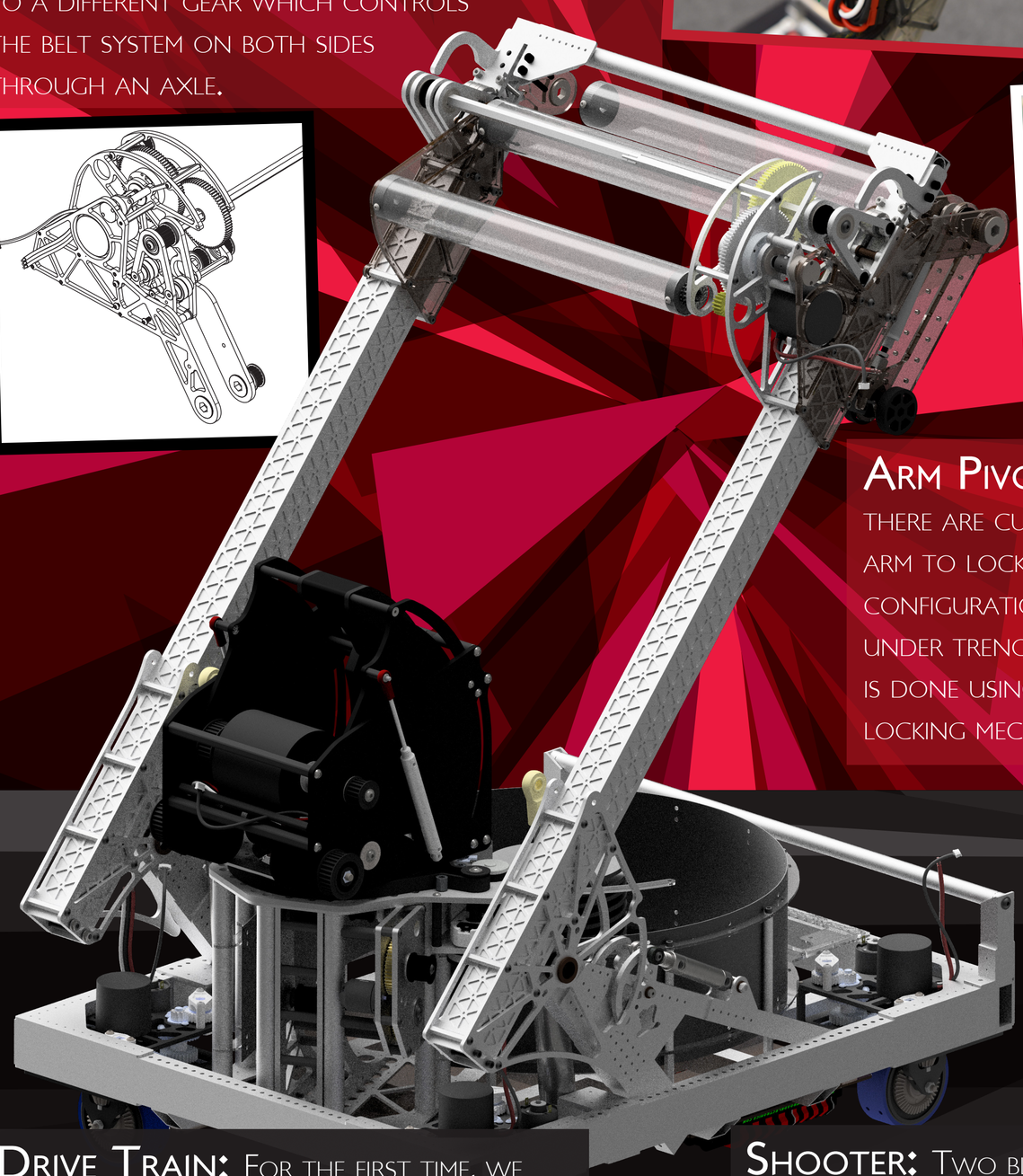

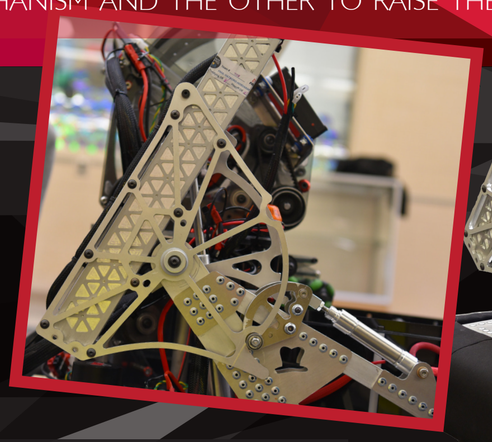

Drive Train: For the first time, we have incorporated a swerve drive using West Coast Drive kits. Each wheel is controlled by two motors, one to shift the orientation of the wheel and the other to rotate. This allows us to have more maneuverability on the field.

Shooter: Two black fairlane flywheels shoot power cells out. It has an adjustable hood controlled by air cylinders with a high and low position for different angle trajectories on the field.

Hopper: A carousel-like manipulator agitates the power cells using a conveyor brush in the center and a slippery plastic forms a siding.

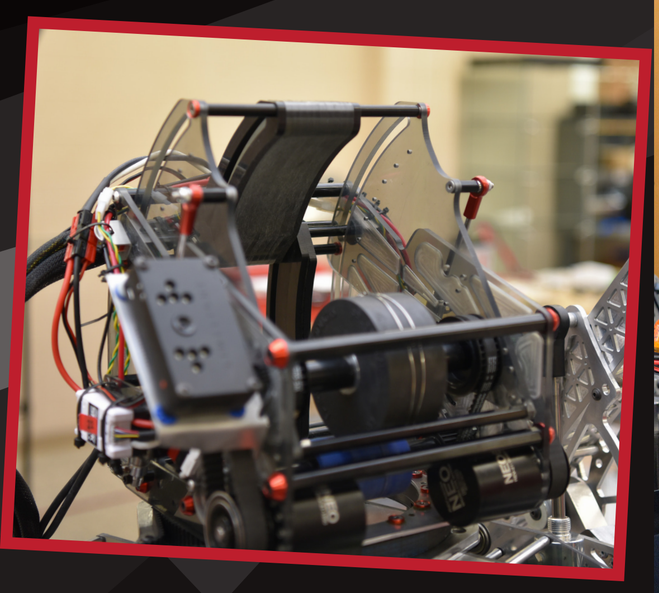

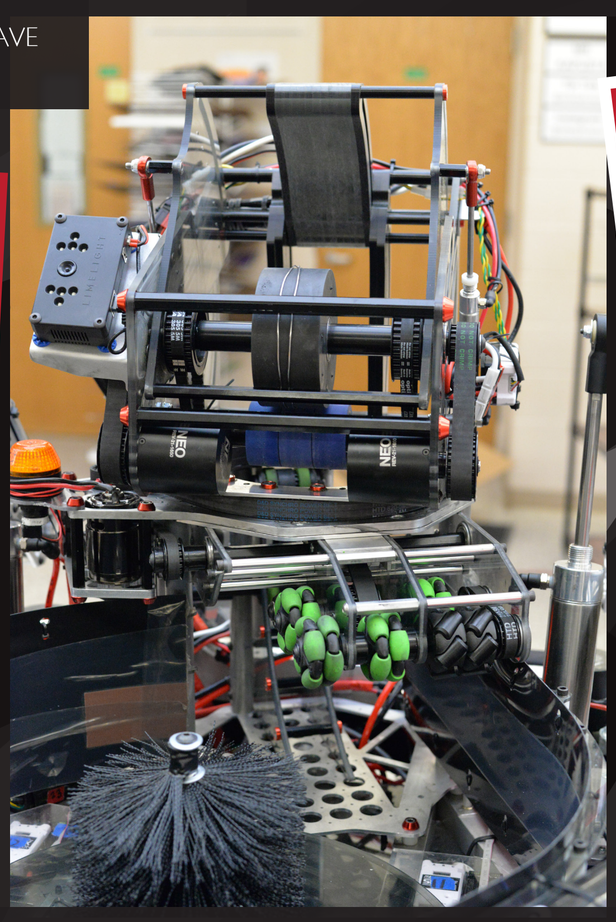

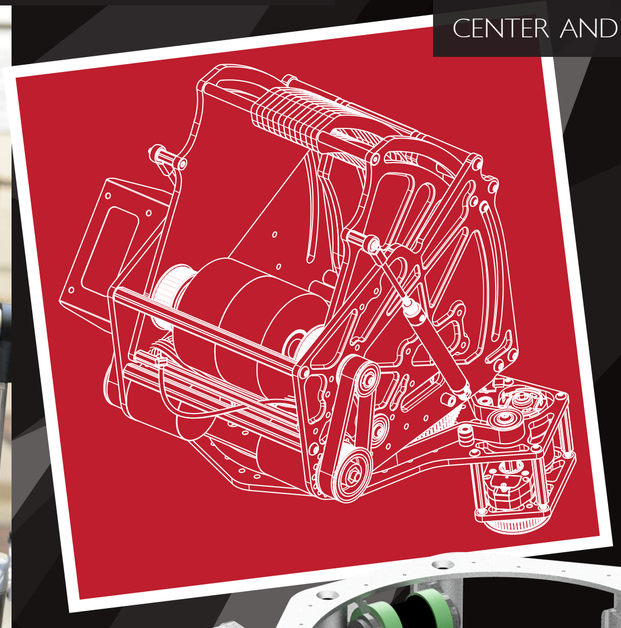

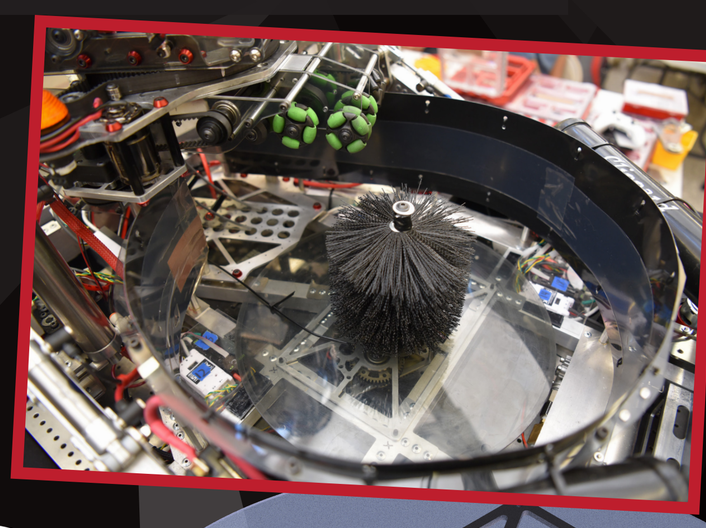

Electronics Panel: Designed to hold the main electronic components in a confined space. The electronics panel is mounted under the robot using isolating well nuts.

Turret: A large sprocket greater than the diameter of a power cell where belts turn the shooter sitting on top. The turret system allows for a "field-centric" shooter that is always oriented to the goal.

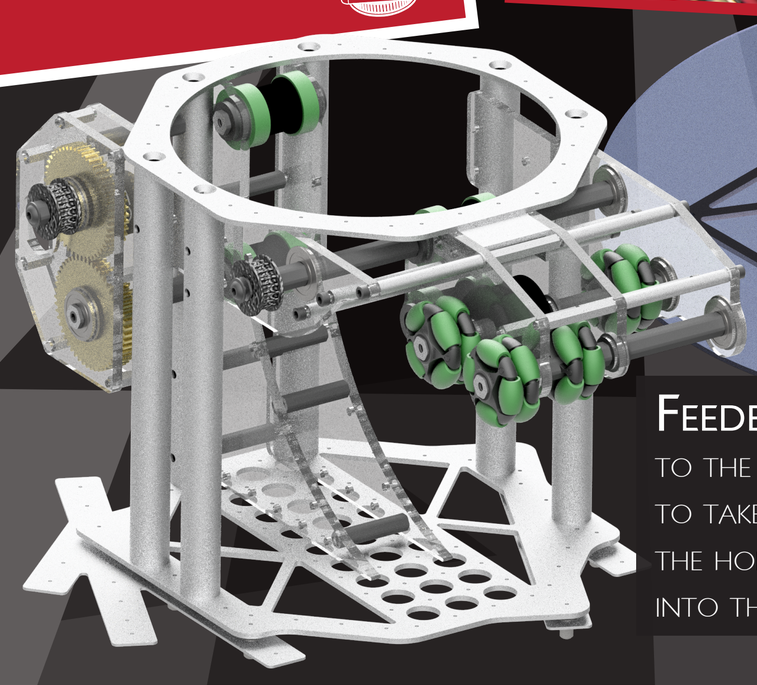

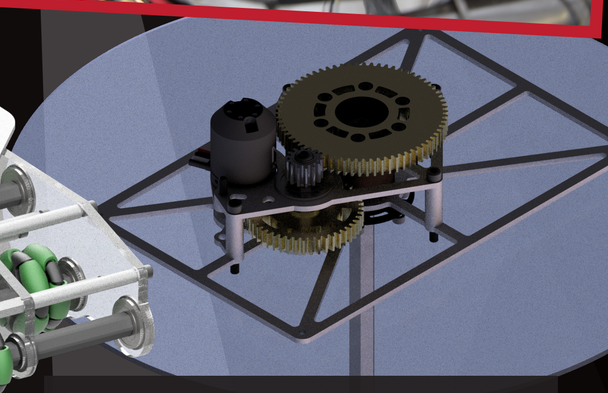

Feeder: A structure tangent to the hopper that uses wheels to take the power cells out of the hopper and transfers them into the shooter above.